Emergency escape lighting

Version „KAPPA"

Emergency escape lighting
Version „KAPPA"

Surface mounted lamp recessed
Single battery system

Luminous intensity distribution:

Anti-panic lighting

Specification

Version	KAPPA recessed lamp
Light distribution	Symmetric (Please ask for: Isolux diagram / EULUMDAT-data)
Mounting	Surface mounted recessed
Light source	2 x 3 W LED
Power	10 VA
Battery	NiMH 3,6 V / 2500 mAh, service life rating 3,0 h
Ambient temperature	-10 °C - +40 °C
IP class	IP 40
Protection class	I
Housing	Steel sheet coloured, standard colour RAL 9010 (white)
LED-Panel	Steel sheet coloured, standard colour RAL 9005 (black)
Weight	ca. 0,8 kg
Dimension (∅ x depth)	∅ 130 mm x 60 mm
Terminal	WAGOLighting connector 2,5 mm^2
Installation in flash-mounted box	Flash-mounted box delivery component (no. 9073-91)

Order information

	Standard colour RAL 9010	Special colour: Y = RAL colour
Single battery system **Lamp self-contained**	**752550 – EKP/E/S/Z/DE/S**	**752551 – EKP/E/S/Y/DE/S/RAL**
Single battery system **Lamp with 2 wire bus system**	**752570 – EKP/E/S/Z/DE/C**	**752571- EKP/E/S/Y/DE/C/RAL**

Dimension

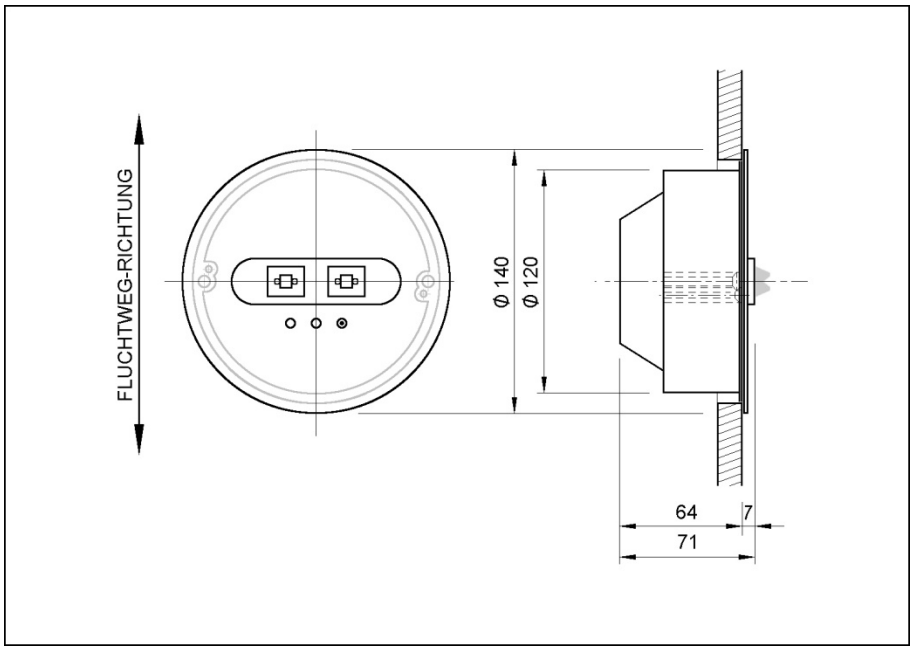

Display mode – Indicator LED

Handling push button	Mode of indicator LED	Meaning	Troubleshooting
	Green LED on	Charging function is running	
	Green LED off	No charge (battery is missing)	→Connect battery
Keep push button pressed until green LED flashes (longer interval)	Green LED flashes (longer interval)	Verify function – functional test is running	
Keep push button pressed until green LED flashes (short interval)	Green LED flashes (short interval)	Verify function – capacity test is running	
Keep push button pressed at capacity test	Green LED flashes (short interval)	Stop capacity test	
	Green LED short flashes	Status check of monitoring system is running	
	Red LED on	Defect of lighting source	→Exchange defect lighting source (LED)
	Red LED off	No fault	
	Red LED flashes (longer interval)	Battery defect	→ Charge battery for 14 h at least or exchange battery
	Red LED flashes (short interval)	Battery test is required after 1 year	→ Press push button until green LED flashes (short interval)

Installation

See document „Installation instruction Emergency escape lighting version KAPPA surface mounted recessed"

Forchheim und Willing GmbH
Südstraße 21
09221 Neukirchen / Erzgebirge - Germany

Phone: 0049 371 27816-0
Fax: 0049 371 27816-29
E-Mail: info@forchheim-willing.de
Internet: www.forchheim-willing.de